PUMPS & FLUID ENDS

UP TO 15,000 PSI (1000 BAR)

Jetstream®
Subsidiary of Federal Signal Corporation

UNx® FLUID END UPGRADES MODEL 3015N

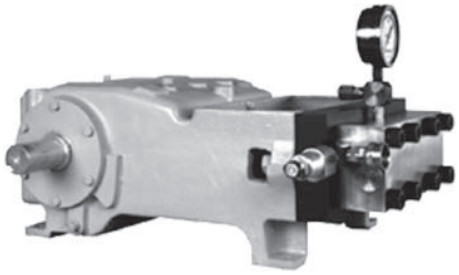

The Jetstream UNx Fluid End Upgrade is ideal for replacing a damaged, costly, or unreliable fluid end. It is also a cost-effective solution to increase the available operating pressure or range of pressures for those who have already converted to the UNx. The upgrade delivers all of the benefits of the UNx Fluid End design.

- Three plunger (triplex) design
- Superior performance
- Greater flexibility in the field
- Reduced downtime and maintenance
- **See UNx Features and Benefits on page B-1**
- Threaded plungers
- Includes hose adapters and one rupture disc holder
- Choose an additional rupture disc holder or a Severe Service Relief Valve as a second safety device
- Pressure gauge and burst discs not included
- Bolt-on installation requires only minutes
- Once upgraded to the UNx design, the unit can be supplemented with additional fluid ends to expand its range of operating pressures.

Fits the following pump models:

NLB — 1012C, 1012D
Union — TD-60 (power end)

General Specs

Plungers			Connection Types*		
#	Stroke		Discharge Ports	Top Ports (Accessory)	Supply Port
	in	mm			
3	3.00	76	1/2" NPT Fml	1/2" NPT Fml	1-1/2" NPT Fml

* See details on all connection types beginning on page I-2.

Related Items

SEVERE SERVICE RELIEF VALVES – See page G-2
BURST DISCS – See page G-1
PRESSURE GAUGES – See page F-1
PLUNGER PACKAGES – See page B-54
SPARE PARTS PACKAGES – See page B-53
PUMP TOOLS – See page B-55

Fluid End Specs

Part No.	Plunger Size			Flow at Specified Pump Speeds**										Power Input		Max. Flow / Pressure			
	No.	Diameter		150 RPM		200 RPM		300 RPM		400 RPM		500 RPM				Flow**		Pressure	
		in	mm	gpm	lpm	gpm	lpm	gpm	lpm	gpm	lpm	gpm	lpm	hp	kW	gpm	lpm	psi	bar
51720	#7	.735	18.67	2.5	9	3.3	13	5.0	19	6.6	25	8.3	31	**75**	**56**	**7.8**	**30**	**15,000**	**1000**
51725	#8	.800	20.32	2.9	11	3.9	15	5.9	22	7.8	30	9.8	37	**100**	**75**	**10.2**	**39**	**15,000**	**1000**
														75	**56**	**9.3**	**35**	**12,500**	**850**
51730	#9	.900	22.86	3.7	14	5.0	19	7.4	28	9.9	38	12.4	47	**100**	**75**	**12.9**	**49**	**12,000**	**825**
														75	**56**	**11.6**	**44**	**10,000**	**700**
51735	#10	1.000	25.40	4.6	17	6.1	23	9.2	35	12.2	46	15.3	58	**100**	**75**	**15.5**	**59**	**10,000**	**700**
														75	**56**	**14.5**	**55**	**8,000**	**550**
52265	#11	1.125	28.58	5.8	22	7.7	29	11.6	44	15.5	59	19.4	73	**100**	**75**	**19.2**	**73**	**8,000**	**550**
														75	**56**	**17.9**	**68**	**6,500**	**450**

** Displacement (flow) values represented refer to "theoretical" flow, neglecting inefficiency resulting from compressibility of water and expansion of pressure-bearing components. Performance data is based on power end specifications published by the original equipment manufacturer; however, some power ends may differ from those used to determine the values above. Contact a Jetstream Solutions Provider for help with fluid end selection.

Copyright Jetstream of Houston, LLP © 2011
Effective 2/2011

PUMPS & FLUID ENDS

UP TO 15,000 PSI (1000 BAR)

Jetstream® Subsidiary of Federal Signal Corporation

UNx® FLUID END UPGRADES
MODEL 3015N
REPLACEMENT PARTS

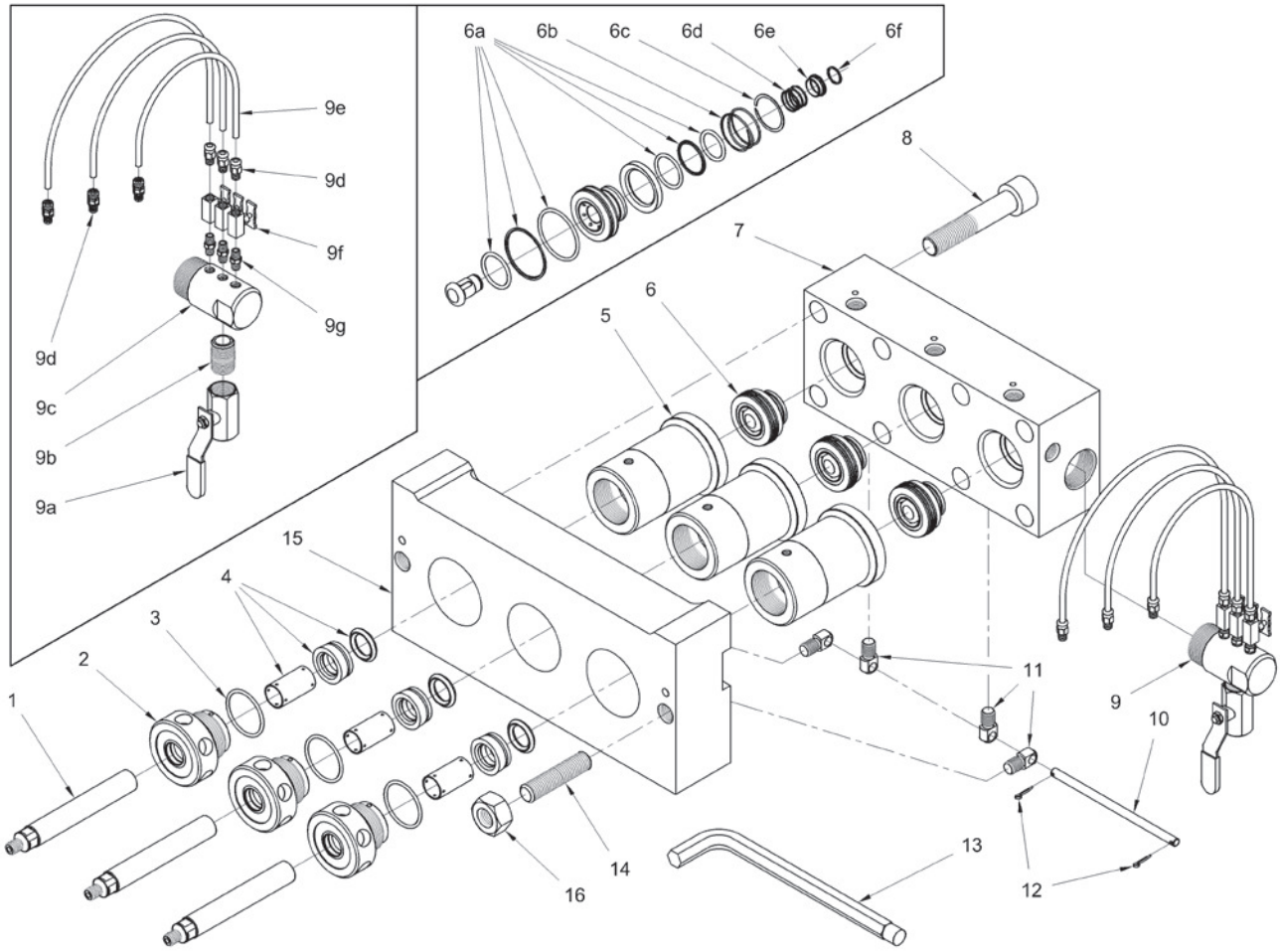

Item	Part No.	Description
1	51690	#7 Plunger
	51696	#8 Plunger
	51667	#9 Plunger
	51694	#10 Plunger
	52983	#11 Plunger
2	51617	#7 Gland Nut
	51619	#8 Gland Nut
	51621	#9 Gland Nut
	51623	#10 Gland Nut
	52231	#11 Gland Nut
3	26416	O-Ring
4	51689	#7 Packing Set
	51691	#8 Packing Set
	51674	#9 Packing Set
	51697	#10 Packing Set

Item	Part No.	Description
4	52233	#11 Packing Set
5	51611	#7 & #8 Stuffing Box
	51671	#9 & #10 Stuffing Box
	52232	#11 Stuffing Box
6	51675	Uni-Valve
6a	50034	Uni-Valve Seal Kit
6b	26476	Discharge Valve Spring
6c	26470	Retaining Ring
6d	26472	Suction Valve Spring
6e	51664	Spring Retainer
6f	26474	Retaining Ring
7	51672	Manifold
8	26462	Manifold Bolt
9	51695	Lube Harness
9a	27101	Ball Valve

Item	Part No.	Description
9b	25946	Nipple
9c	53242	Lube Manifold
9d	27732	Tubing Fitting
9e	27740	Tubing (Order in feet)
9f	27475	Needle Valve
9g	26465	Nipple
10	51666	Trunnion Rod
11	51659	Trunnion
12	26468	Cotter Pin
13	50064	Pump Wrench
14	28779	Adapter Plate Stud
15	51692	Adapter Plate
16	25864	Adapter Plate Nut

Copyright Jetstream of Houston, LLP © 2011
Effective 2/2011